Unauthorized reproduction of this drawing is not permitted.
This drawing contains proprietary and confidential information.

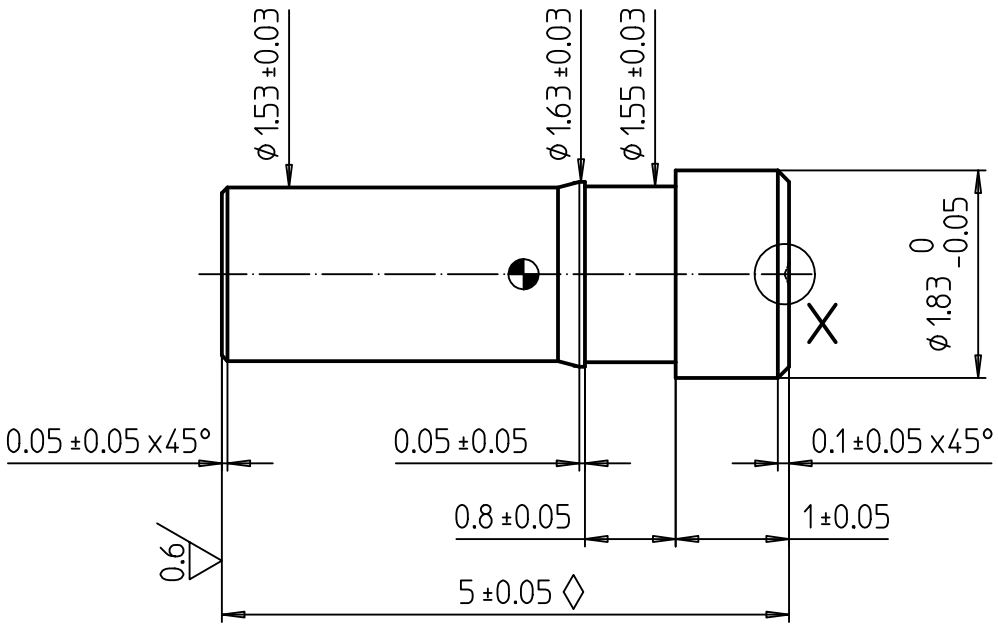

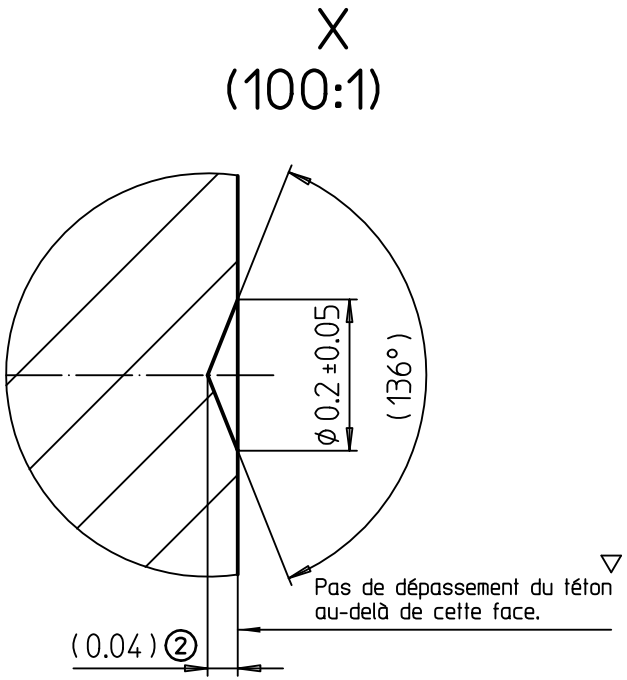

·	·	Laiton 61A 590-650 N/mm2		0.25 µn Gold over NiP
Variante	Code	Matière	Traitement	Protection
				Remplace:
				Remplacé par:
Unless otherwise specified: all dimensions are before plating		05-020	15:1	Dessiné 27.09.2022 C.Bidault
Surface: 30.02 mm2	Mèche:			Contrôlé
preci-dip swiss world connect				N° dessin: 50368-C — Révision

NOTES

- ▽ Caractéristique critique interne
- ◊ Element clé interne